PWR SOC 21

Philadelphia, Pennsylvania USA
Oct. 24-27, 2021

Vertical Stacked 48V-1V Voltage Regulator for Ultra High Current Microprocessors

Youssef Elasser, Jaeil Baek, and Minjie Chen
Princeton Power Electronics Research Lab
Princeton University

PRINCETON UNIVERSITY
PRINCETON POWERLAB

Background & Motivation

- Microprocessors consuming power in the range of kW with low voltage and high current need high performance voltage regulators

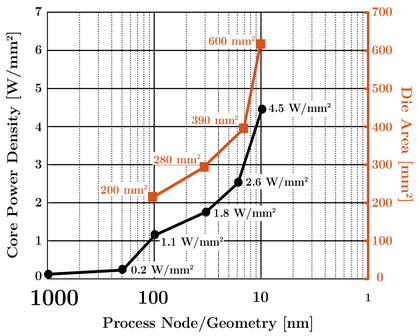

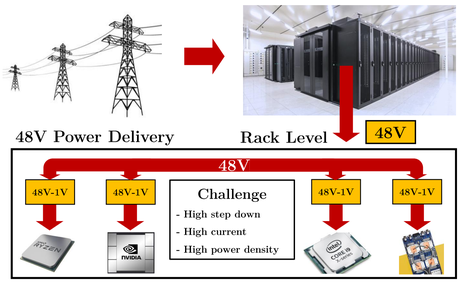

LEGO Point-of-Load Architecture

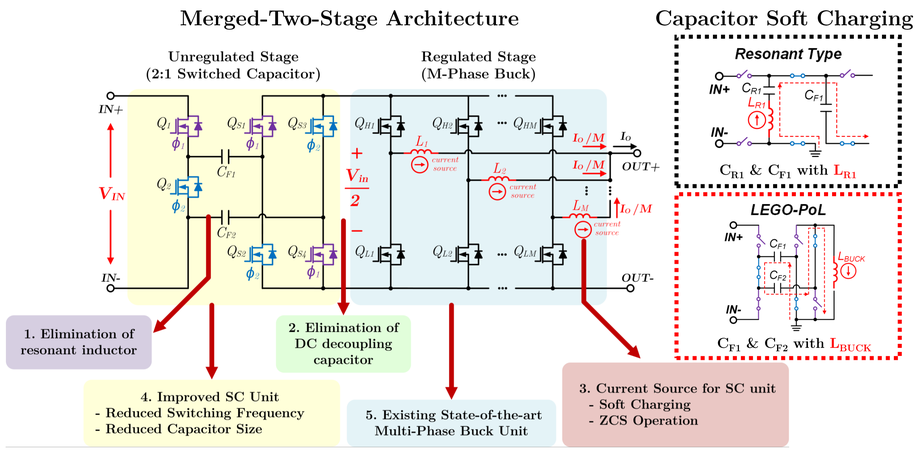

- Scalable and modular LEGO-PoL with automatic voltage and current sharing

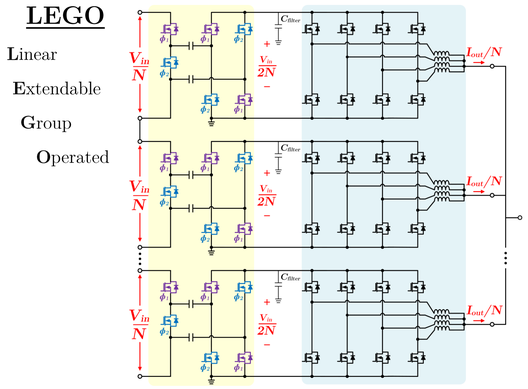

Vertical Power Delivery

- Vertical power delivery

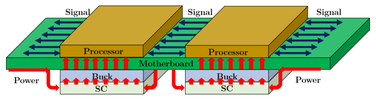

- Reduced power delivery loss
- More area for signal routing (multiple processors)

Intel PowerVia

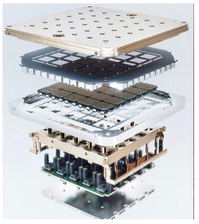

Tesla Dojo

- Custom vertical four-phase coupled inductor

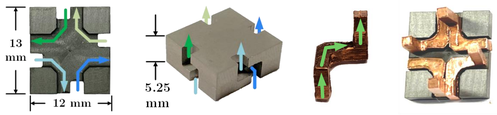

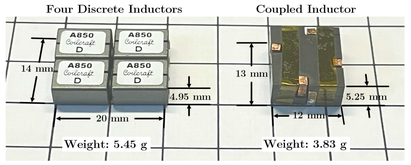

Benefits of Multiphase Coupling

- Reduced Energy Storage Requirements
- Lower Phase Current Ripple
- Fast Transient Speed

Further Reading

Journal Paper

SCAN ME

48 V – 1 V / 780 A LEGO-PoL Prototype

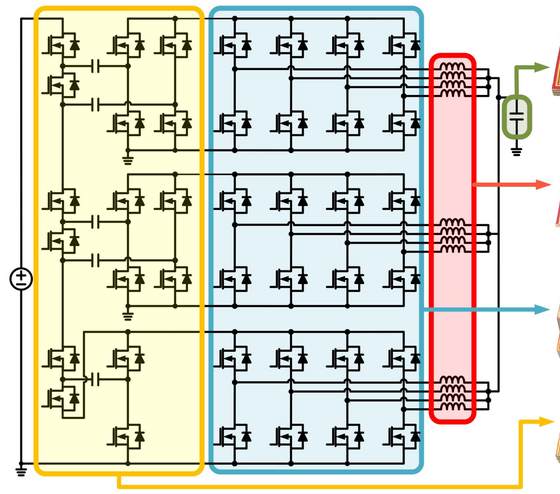

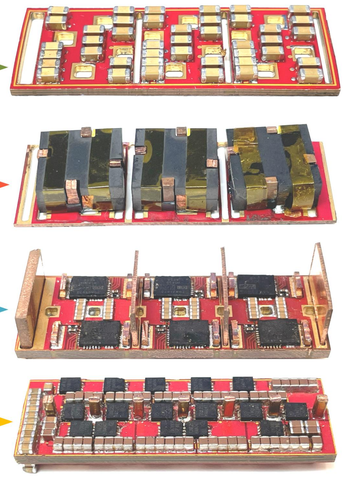

Output Capacitors
42 × 220 µF
X7R, 1206

Coupled Inductors
Height: 6.05 mm
Weight: 11 g

Multiphase Buck
Height: 4.2 mm
Weight: 12 g

Switched Capacitor
Height: 6.4 mm
Weight: 17 g

LEGO-PoL: 450 W

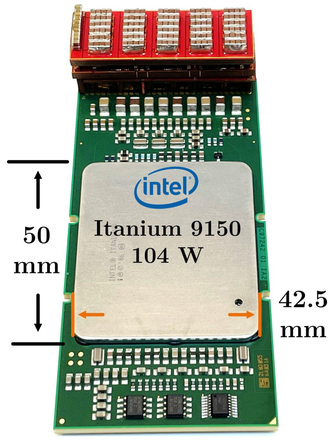

46.5 mm × 16.5 mm × 16.65 mm

Switched Capacitor (SC) | SC + Buck | Coupled Inductors | SC + Buck + Inductors

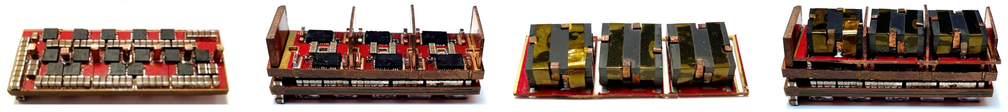

1 — 2 — 3 — 4 — 5

Experimental Results

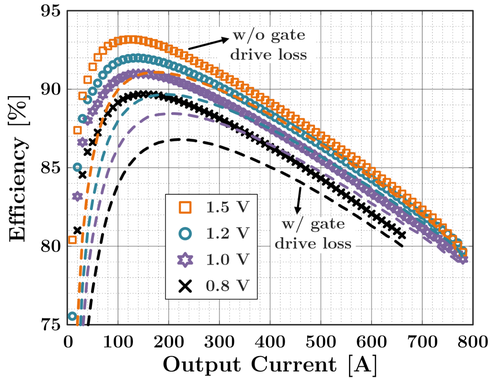

Peak Efficiency

91.1%
48 V to 1 V / 160 A
without gate driving losses

92.0%
48 V to 1.2 V / 150 A
without gate driving losses

93.2%
48 V to 1.5 V / 140 A
without gate driving losses

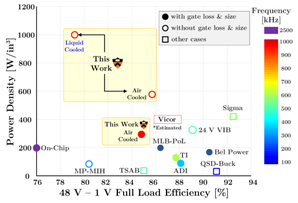

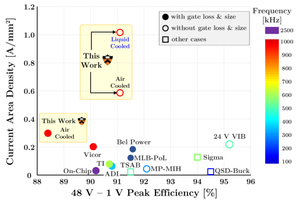

Acknowledgements and Contact

PRINCETON UNIVERSITY
Youssef Elasser, Jaeil Baek, Minjie Chen

Dartmouth
Charles Sullivan

Google
Houle Gan, Xin Li, Shuai Jiang

intel
Kaladhar Radhakrishnan, Johnathan Douglas, Harish Krishnamurthy

Vertical Stacked LEGO-PoL CPU Voltage Regulator

J. Baek, Y. Elasser, K. Radhakrishnan, H. Gan, J. Douglas, H. K. Krishnamurthy, X. Li, S. Jiang, C. R. Sullivan, and M. Chen
TechRxiv. Preprint. 2021. Submitted to *IEEE Transactions on Power Electronics*.