Power delivery in IoT applications with on device AI

Karim Arabi, Ph.D.

CEO and Founder, Atlazo

atlazo

AI is Moving from Cloud to Edge

Efficient On-Device AI a Must

Ample computing resources
Availability of big data

Better model accuracy
Redundancy
Security
Best for training

Low latency, real-time
Always-ON, continuous

Lower power
Privacy
No data overload
Best for inference

100X Lower Power Edge Computing

Miniaturized single chip solution with 100x improvement in performance and 2x reduction in cost

Atlazo Innovations

High efficiency Power management

Smart sensor interface

AI @ the edge

Ultra-low power design

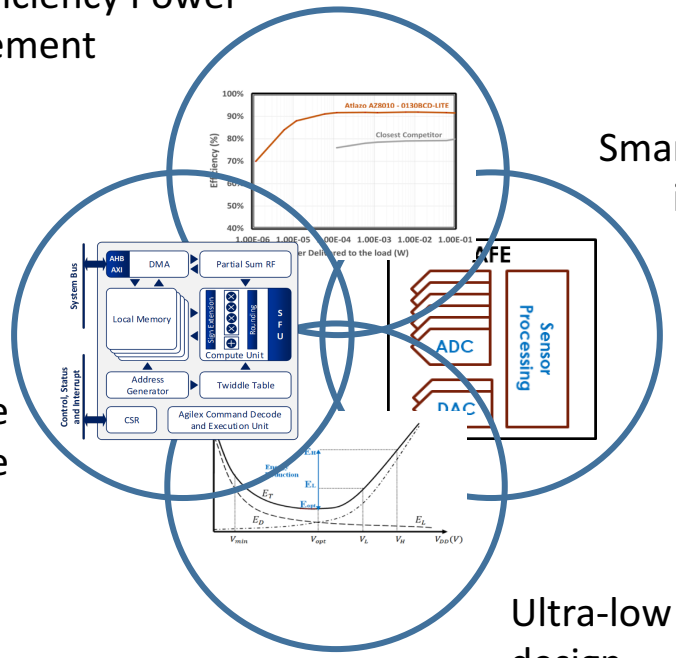

Atlazo Value proposition

+10X Lower Computing Power

+10X Lower Sensing Power

+2X Lower Communication Power

+2X Smaller Board Space

Low Cost Low Power AI at the Edge

Own the entire hyper-low power AI SoC and software space

Billions of battery powered devices with intelligent monitoring everywhere

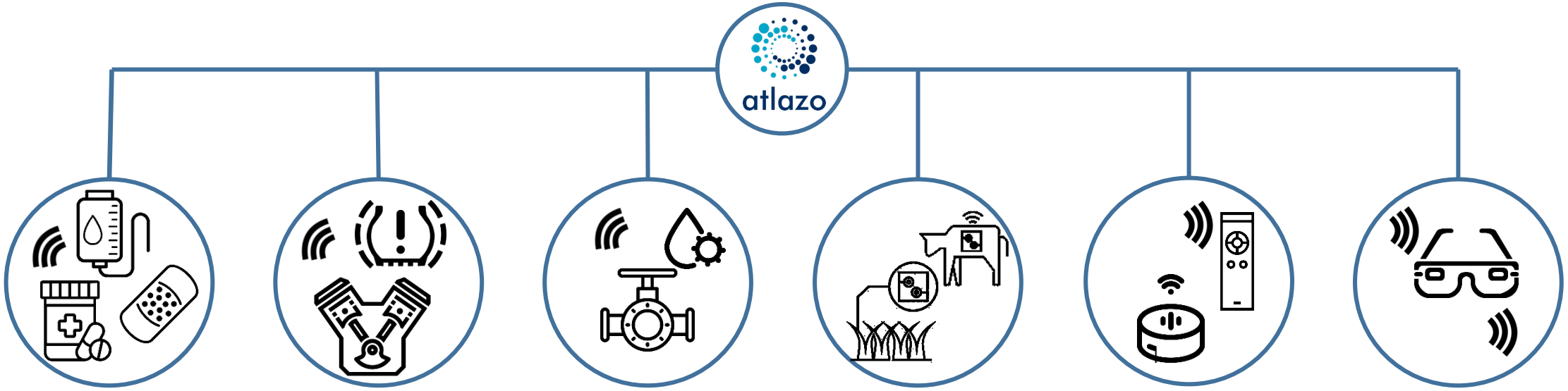

Medical **Automotive** **Industrial** **Agriculture** **Smart Home** **Mixed Reality**

Precise sensing accuracy using dynamic calibration and fusion

Hyper-low power inference and analytics in hard to reach and disposable parts and systems

PMIC Requirements for Hyper Low Power IoT

Ultra low load currents down to few uA

Computing workload under 1mA and always-on
Wireless interface under 10mA and often-off

Low voltage operation down to 0.4V

Low area and low cost

Spur management to mitigate system noise

Integrated charger, if applicable

Traditional PMIC

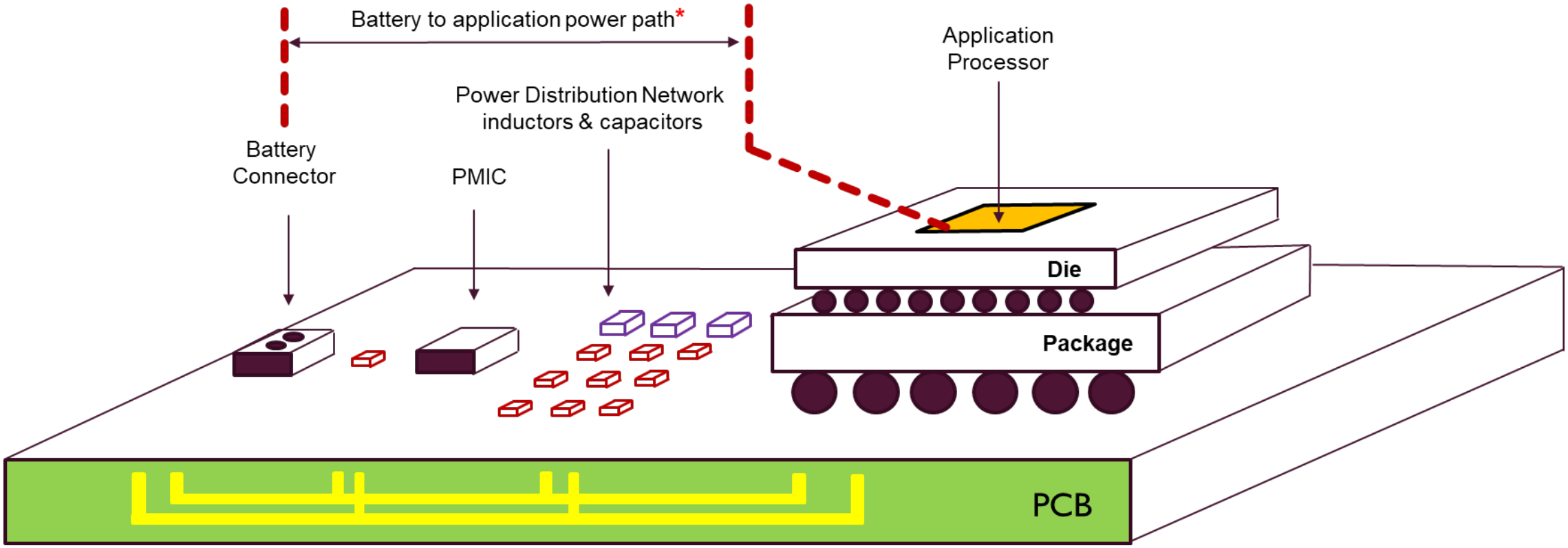

Atlazo ULP AI SoC with PMIC

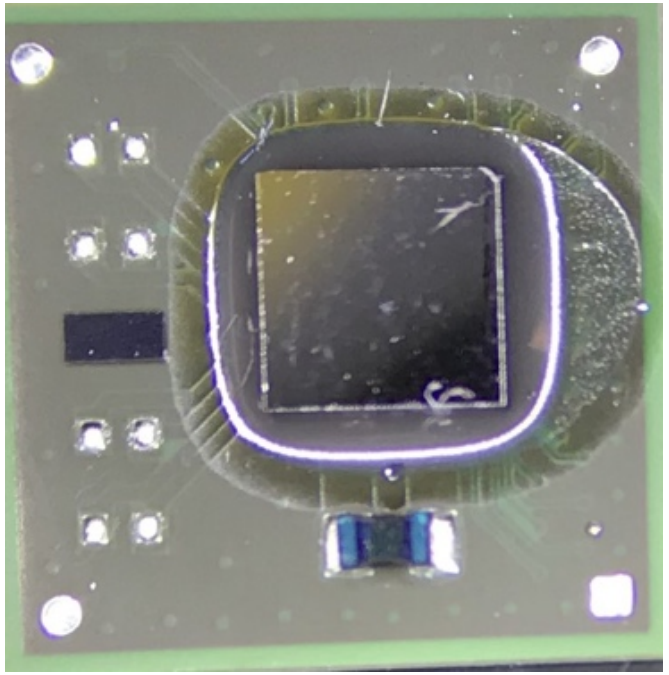

Novel digital controller and topology to work efficiently in low currents

Programmable spur management to mitigate system noise

Reduced number of passives and PCB area

Sub-threshold design to lower quiescent current

Atlazo ULP PMIC

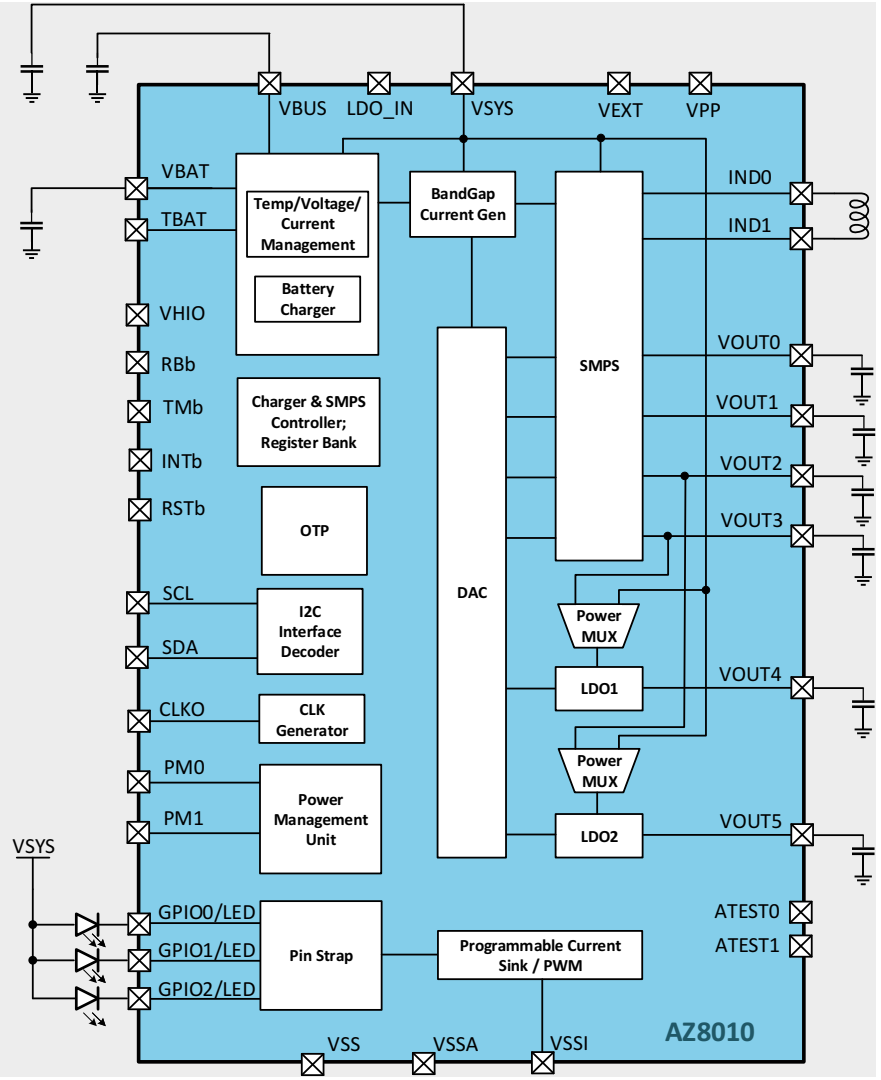

- Efficient power and battery management solutions featuring
  - Flat efficiency
  - >50% reduction in PCB area
  - Regulate down to 1uA load
- < 1uA operating quiescent current
- 4 programmable SMPS outputs
  - 3 step down outputs
  - 1 step down /step up output
- 2 programmable LDO outputs
- Small integrated inductor and capacitors

Silicon Result of Spur-Free Atlazo PMIC

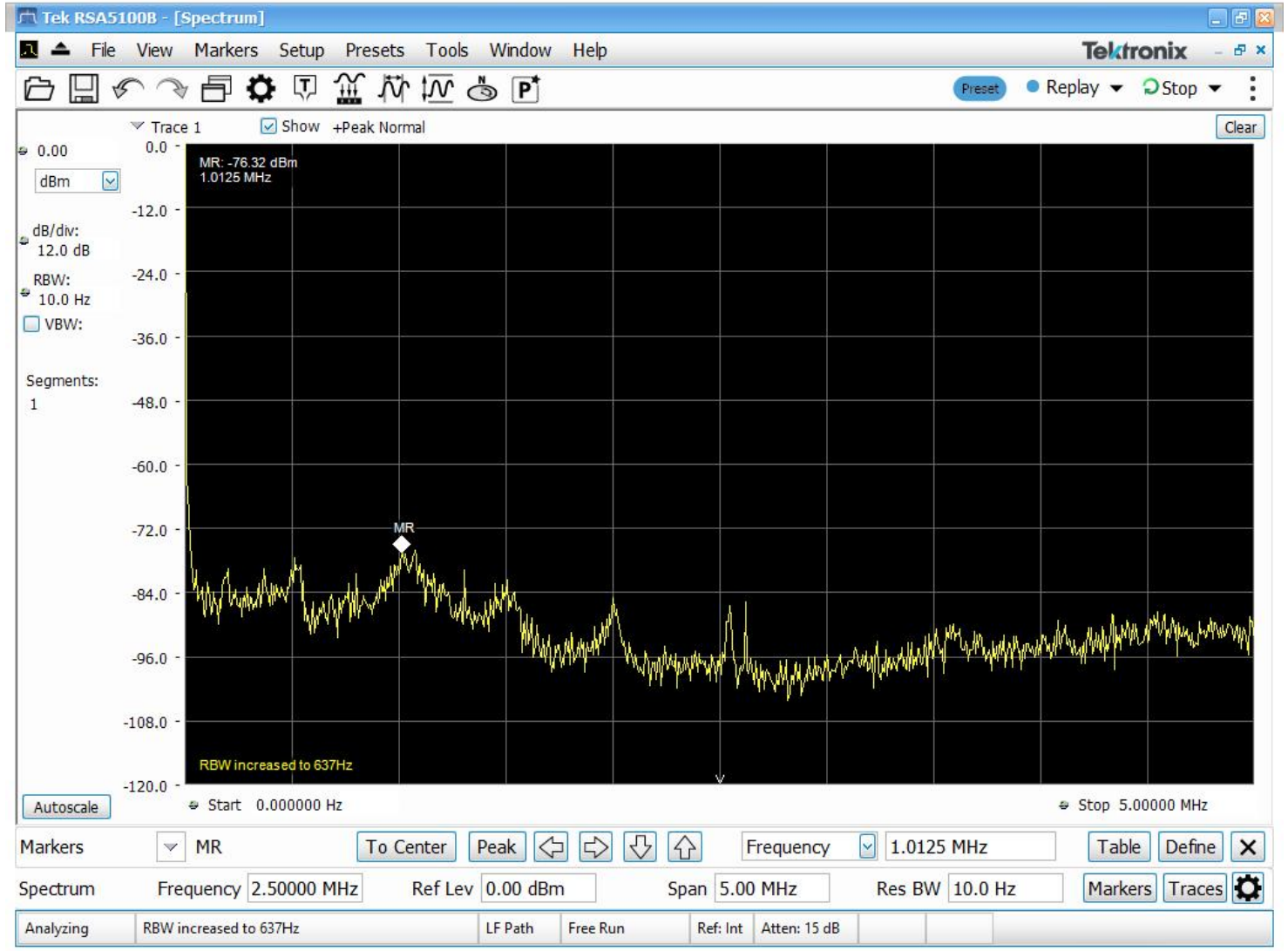

Atlazo PMIC Spur Management

- **SNR Improvement**

Competitor

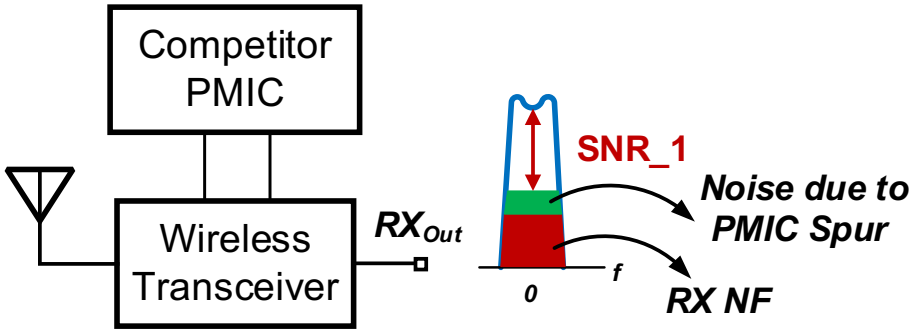

Atlazo

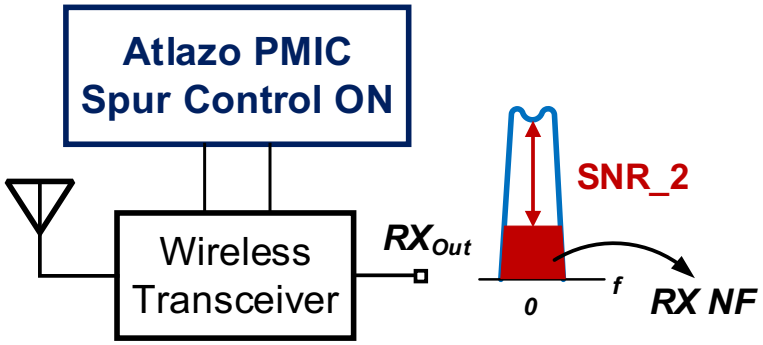

- Receiver SNR degrades due to the large in-band Spurs in PMIC
- Atlazo enables the technology to avoid SNR degradation due to PMIC Spurs

- **Efficiency Improvement**

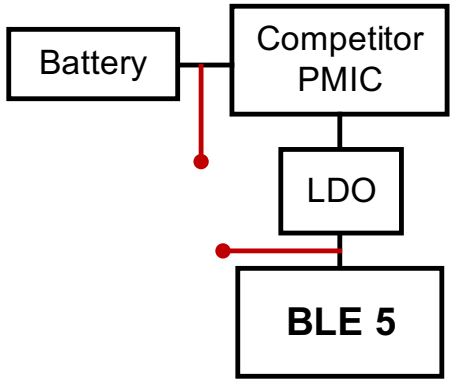

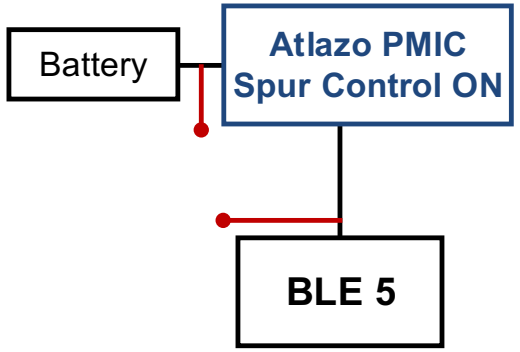

- To attenuate Spurs in PMIC, despite inferior efficiency LDO is added to the path of PMIC to the RFIC.
- Atlazo enables the technology to removes the in-band Spurs and avoid the LDO and the efficiency degradation

Atlazo ULP AI SoC Platform

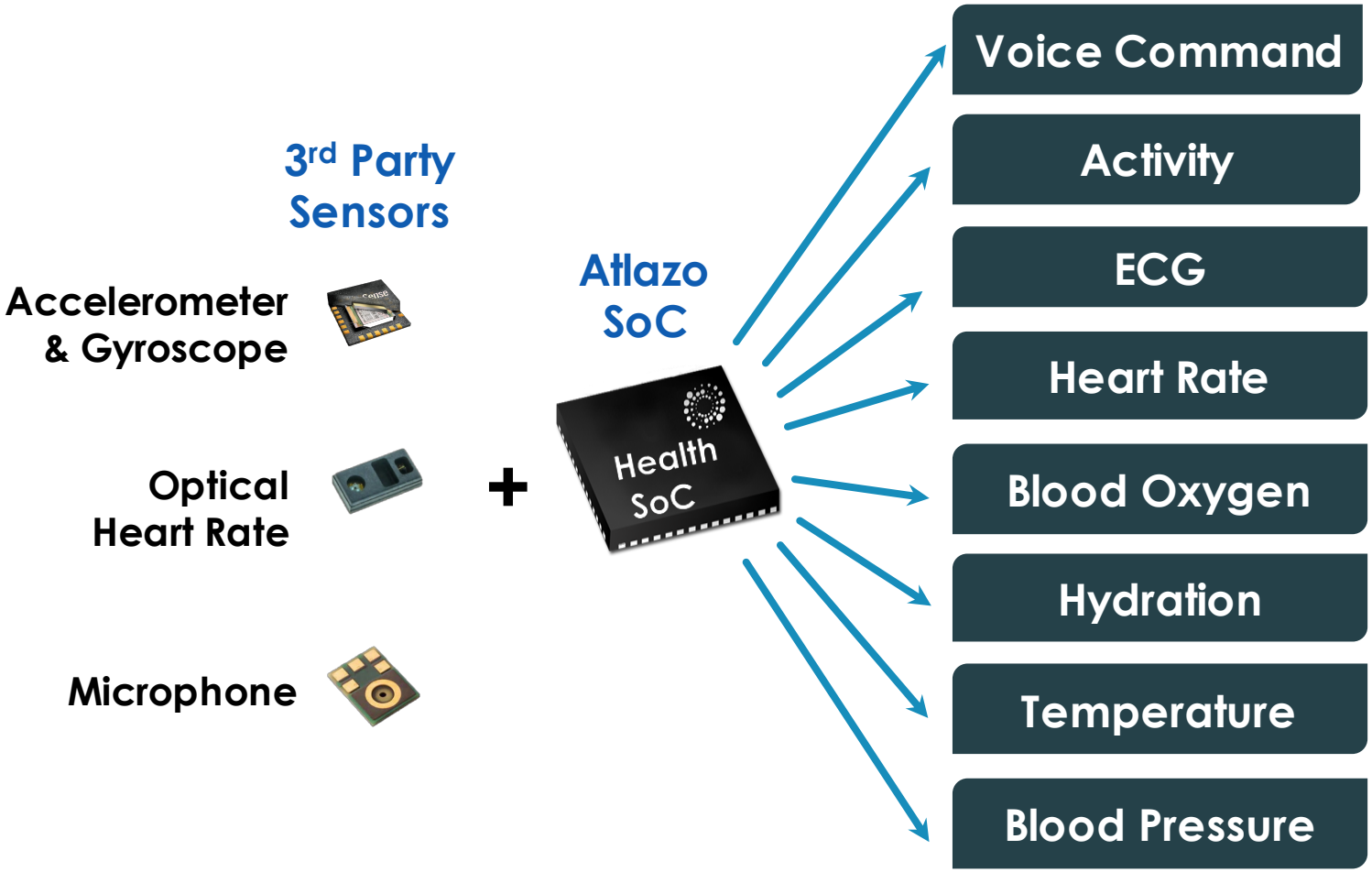

Atlazo ULP AI SoC Platform

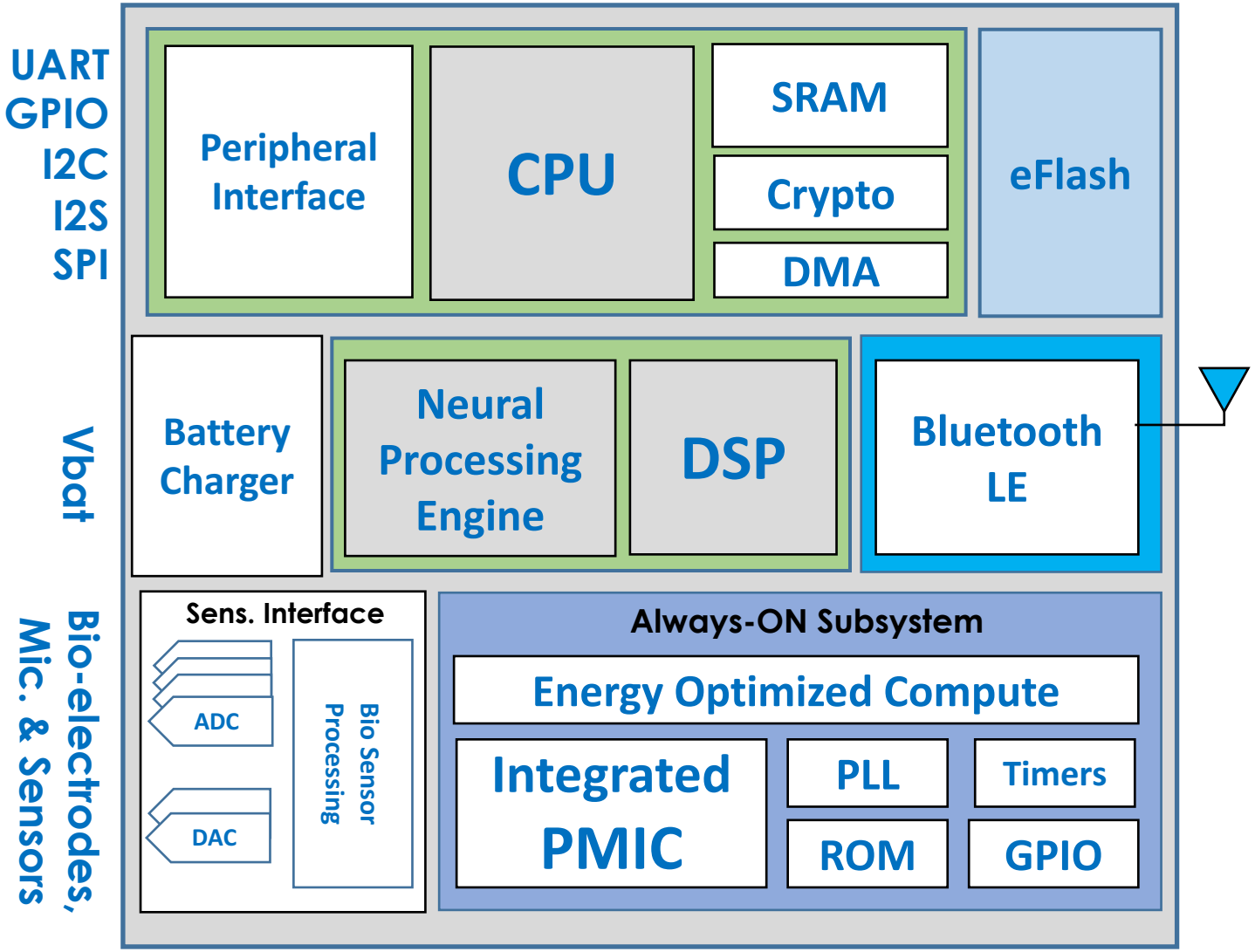

Thank You!