PWR SC 12

Palace Hotel, San Francisco, CA
Nov. 16-18, 2012

# Platform Architecture for Solar, Thermal, and Vibration Energy Combining With MPPT and Single Inductor

Saurav Bandyopadhyay, Anantha P. Chandrakasan, Massachusetts Institute of Technology

## Motivation

Battery-less sensors

Health monitoring

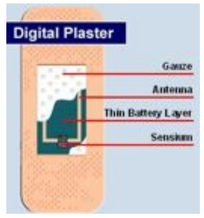


Toumaz Band-Aid

Hand-held Devices

Samsung Blue Earth

- Battery-less operation in sensors and health monitoring systems
- Extend battery life in hand-held portable devices

## Multi-Input Energy Harvesting

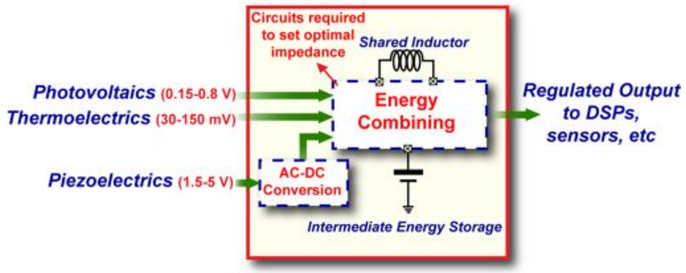


- Source impedances of 5Ω to 100's of kΩ for various harvesters
- Voltage range of 20mV to 5V for various harvesters
- High end to end efficiency

## Harvester Electrical Models

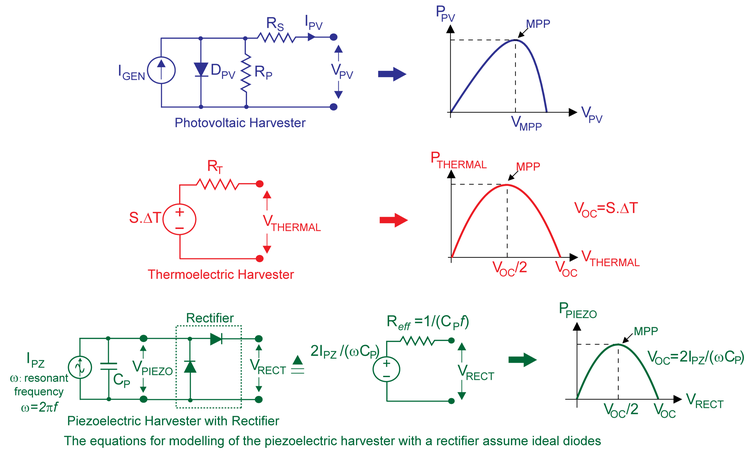


## Dual Path Architecture

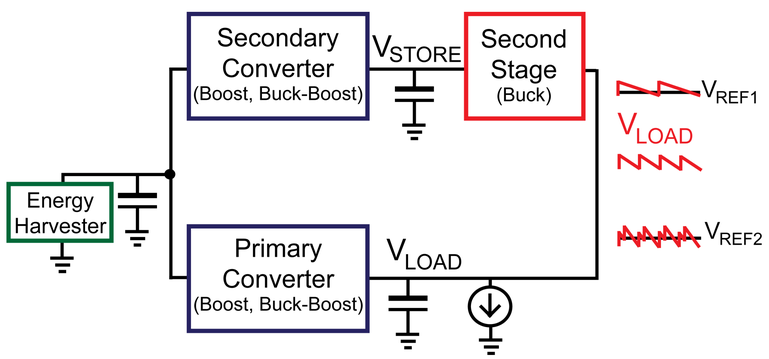


**Peak Efficiency improvement of 13% and 5 to 6% in average case**

## Maximum Power Transfer

**Boost converters with high conversion ratios in DCM**

$$\frac{V_{HAR}}{\bar{i}_L} \approx \frac{2L}{t_1^2 \cdot f_s}$$

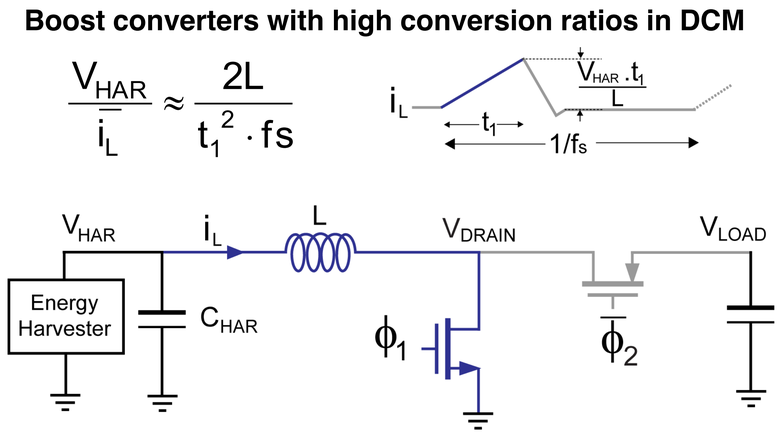


## Switch Matrix

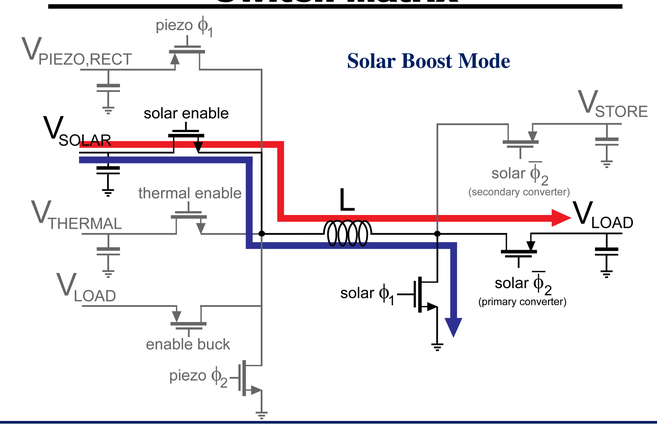


**Parallel Converters with single time shared inductor**

## Measured Efficiencies

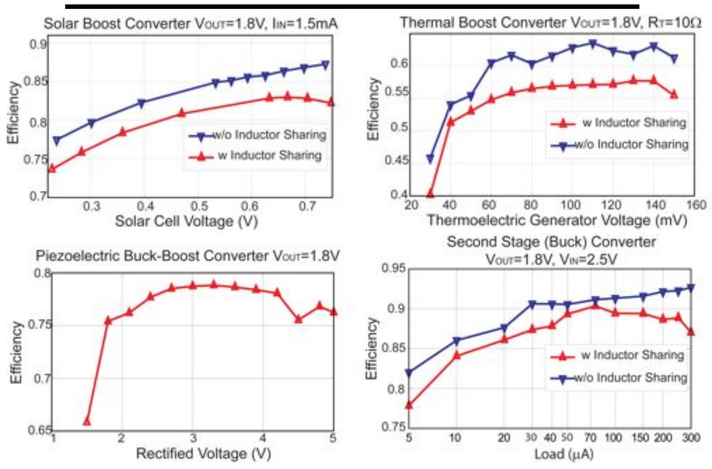


## Transient Measurements

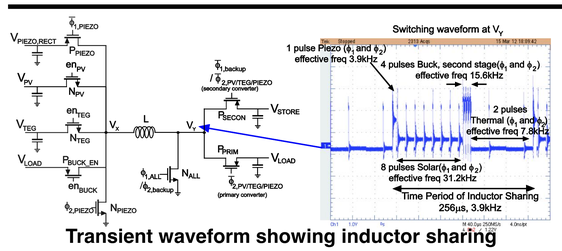

Transient waveform showing inductor sharing

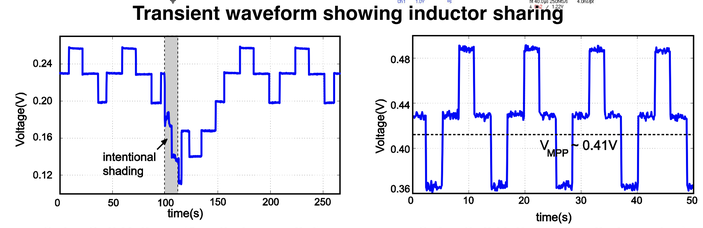


Solar Cell Voltage (2 cells in parallel)

Solar Cell Voltage (2 cells in series)

## Design Summary

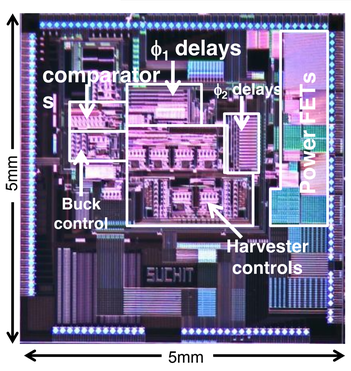


We acknowledge the financial support provided by the Interconnect Focus Center, one of the six research centers funded by the FCRP, a SRC program

| | |
|---|---|
| Technology | 0.35μm (2P4M) CMOS |
| Input Voltages | 20 - 150mV Thermal<br>0.2 - 0.75V Solar<br>1.5 – 5V Piezoelectric |
| Output Voltages | 1.8V Regulated<br>1.8 - 3.3V Storage |
| Maximum Output Power | 1.3mW Thermal<br>5mW Solar<br>200μW Piezoelectric |
| **Thermal:** Seebeck 50mV/K, ΔT=1.7K<br>**Solar:** 1500lux, 15cm²<br>**Piezoelectric:** PZT 3in², 1g | **Thermal Boost:** 96μW<br>**Solar Boost:** 262μW<br>**Piezoelectric Buck-Boost:** 40μW<br>**Total Power:** 398μW |